FRONT SUSPENSION

GENERAL

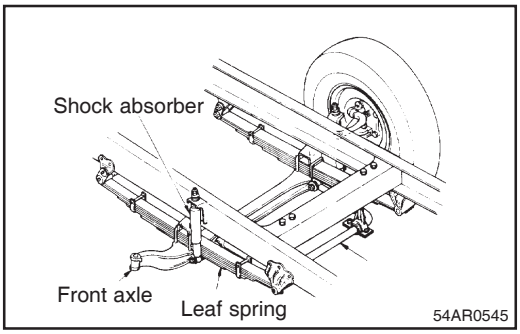

The suspension consists of semi-elliptical piled leaf springs and shock absorbers. The suspension supports the weight of the body and absorbs the vibration and shock from the road surface, thereby preventing their direct transmission to the body for effective protection of he body, passengers and cargo. The suspension also supresses irregular vibrations of the wheels to assure stable operation.

Construction and operation

Depending on the road surface condition and load weight, the leaf springs deflect to provide buffering function. Any change in the span caused by the load is coped with by movement of the spring shackle at the rear end.

Shock absorber adequately damps axle vibration.

In addition, stabilizers are provided to reduce the rolling which occurs when the vehicle markes a turn.

SPECIFICATIONS

Item \ Vehicle model	HD120	
Leaf spring L x Width x t - No. of leaves	1300 x 70 x 11 - 7	
Shock absorber Model	SA301	SA401
Max. O.D.	54	63.5
Cylinder I.D.	30	35
Stroke	210	210
Damping force when extended	1960N (200kgf)	

SERVICE STANDARDS

Service Standards Table

Unit:mm

Maintenance item		Nominal Value (Basic dimeter in [ ])	Limit	Remedy
Leaf spring suspension	Spring bracket to shackle pin clearance (Front side)	0 to 0.05	0.3	Replace shackle pin
	Spring bushing to shackle pin clearance	0.075 to 0.15	0.3	Replace bushing
	Spring bracket to shackle pin clearance (Rear side)	0 to 0.05	0.3	Replace shackle pin
	Shackle bushing to shackle pin clearance (Rear side)	0.025 to 0.15	0.3	Replace bushing
	Shackle link to shackle pin clearance	0.025 to 0.15	0.3	Replace shackle link or shackle pin
	Spring bushing to shackle pin clearance (Front side)	0.075 to0.15	0.3	Replace bushing

TIGHTENING TORQUE TABLE

Unit: mm

Location tightened	Screw size O.D,x pitch (mm)	Tightening torque kg·m
U-bolt mounting bolt	M16 x 1.50	20.8 to 28.2
Shackle pin lock blt Mounting nut	M12 x 1.25	3.5 to 5.5
Shock absorber lower bracket pin nut	M24 x 1.50	36 to 44

SPECIAL TOOLS

Tool (Number and name)	Illustration	Use
Puller set 09431-83100	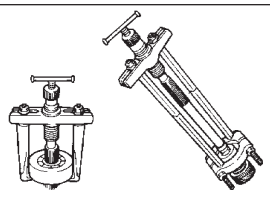 ASST0030	Removal of gear and bearing
Drift 09517-83300	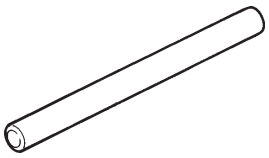 ASST0020	Removal of oil seal and bearing

SERVICE PROCEDURE

REMOVAL

Removal of front suspension

NOTE
- **Remove the brake hose from a side first. Install to brake side first and use care not to twist the brake hose.**
- **Plug removed brake hose to prevent entry of dust and dirt.**
- **After installation, bleed brake system.**

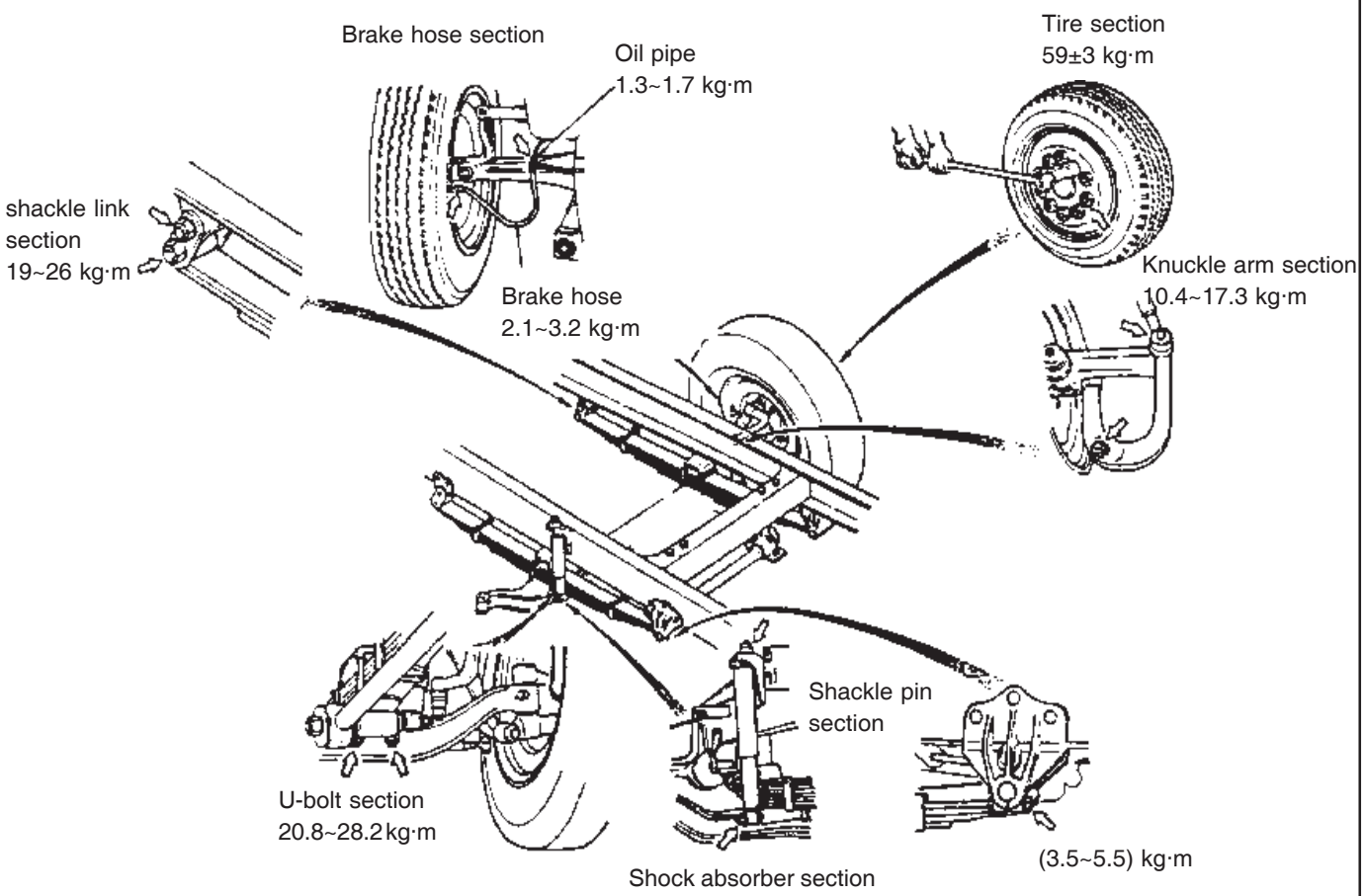

54AR0612

Removal Procedure

(1) Removal of shackle pin lock bolt
Remove the nut from the spring bracket and, using the Bar remove the lock bolt.

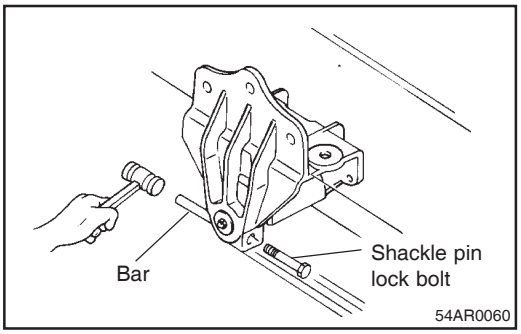

(2) Removal of shackle pin
Remove the grease nipple from the shackle pin and, using the special tool, puller set, remove the shackle pin. Be sure to remove the nut first for the back side.

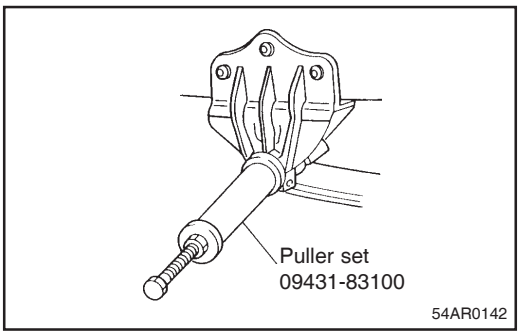

Disassembly, Inspection and Correction

Disassembly of front suspension

BD ... Basic Diameter
NV ... Nominal Value
L ... Limit

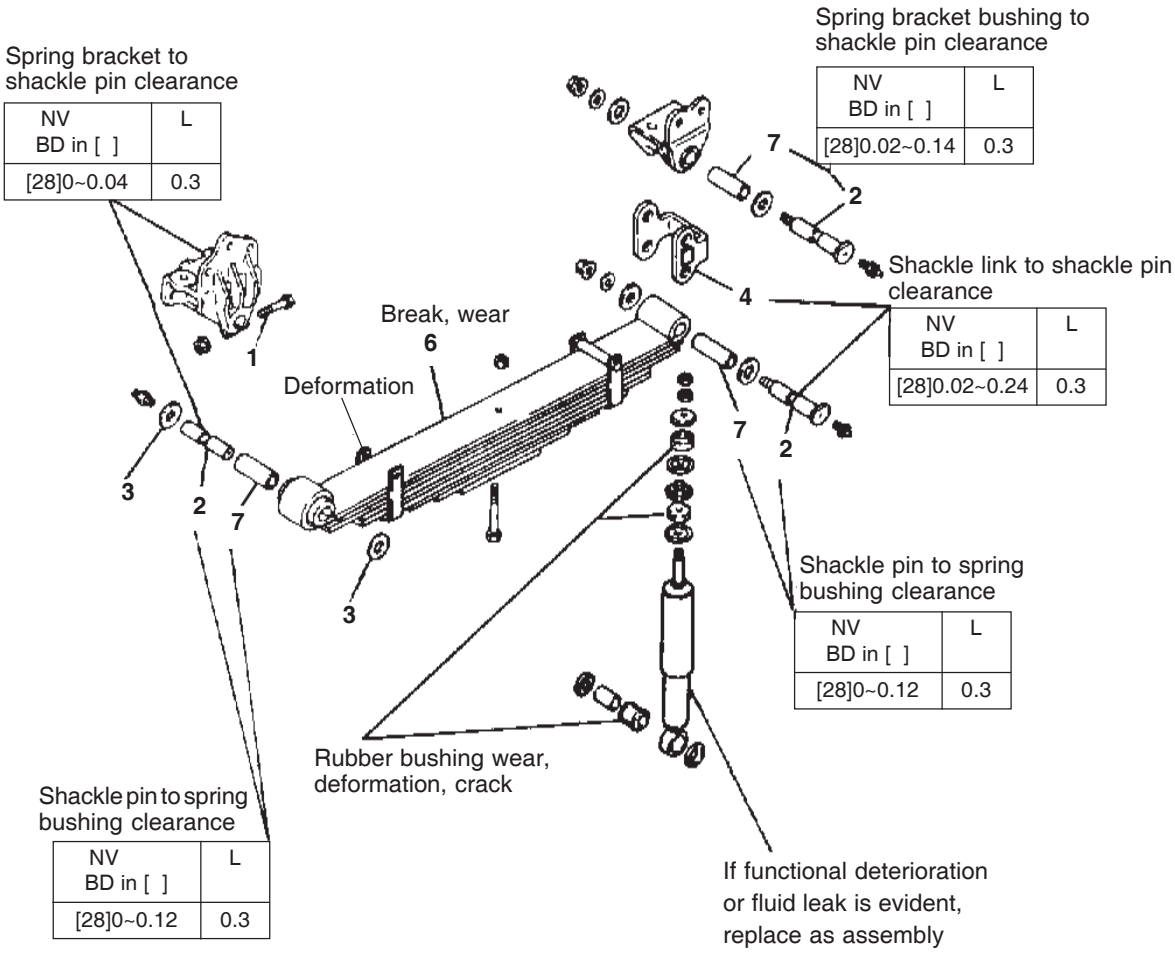

Disassembly sequence

1. Lock bolt
2. Shackle pin
3. Side washer
4. Shackle link
5. Clip
6. Front leaf spring
7. Bushing

For parts with an encircled number, refer to Disassembly and Reassembly Procedure that follows.

NOTE

To reassemble, reverse the order of disassembly.

54AR0074

Disassembly Procedure

(1) Alignment marking
Make an alignment mark on the leaf spring.

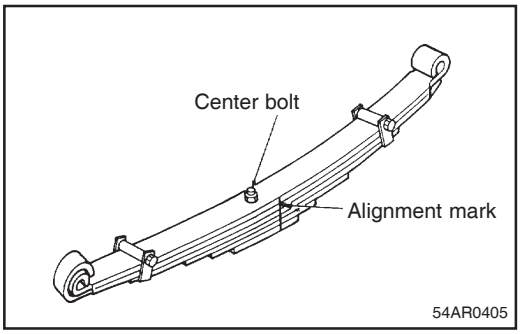

(2) Disassembly of leaf spring
Compress the leaves with a press and remove the center bolt and clip bolts.

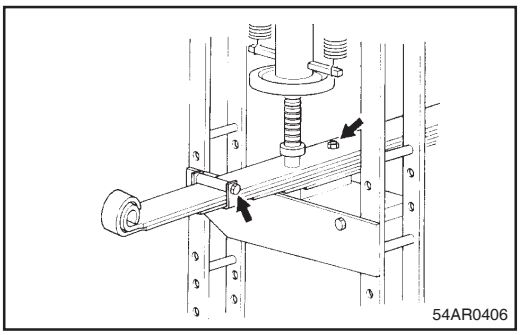

(3) Removal of clips
Using a drill press, countersink the rivet where it is staked and remove the clip.

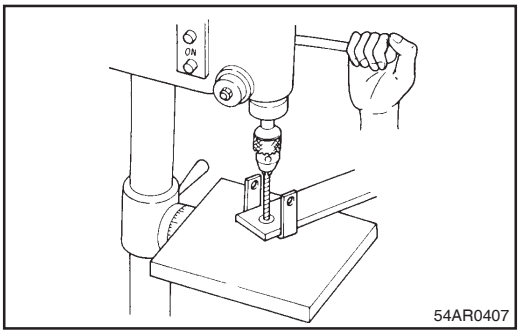

(4) Removal of bushings
Using the special tool, Drift, remove bushing from the wound-up ends of the leaf spring and shackle link.

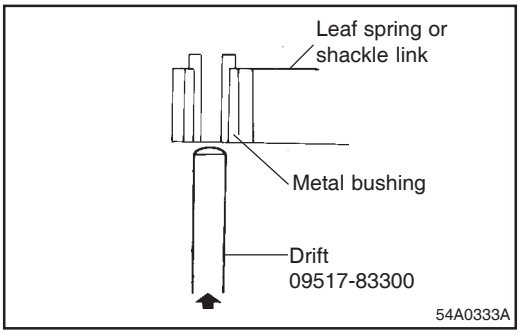

Reassembly Procedure

(1) Installation of bushings
Using the special tool, Drift press-fit the bushing into the wound-up ends of the leaf spring and into the shackle link.

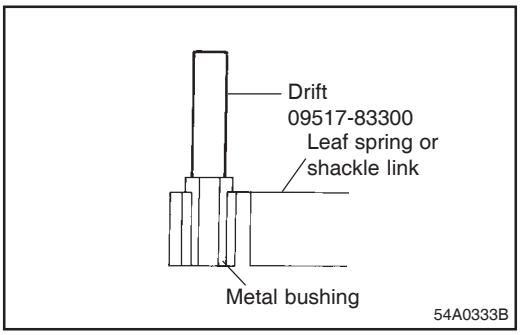

(2) Application of grease
Clean leaf surfaces and apply chassis grease between leaves.

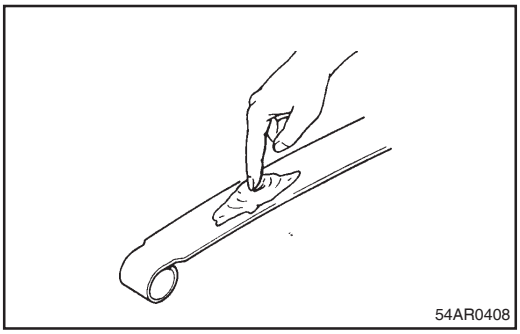

(3) Installation of clips
Using a riveting machine, fit clips into position.

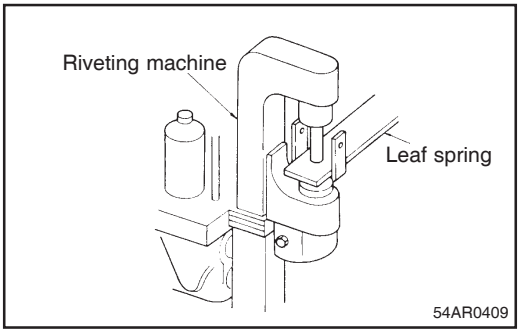

(4) Reassembly of leaf springs
(a) Line up the alignment marks on all leaves and assemble the leaves together by temporarily tightening the center bolt.

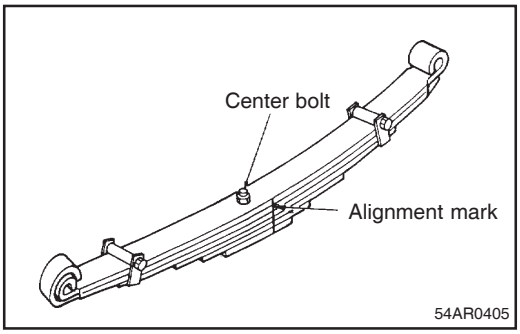

(b) With the leaves compressed with a press, tighten center bolt and clip bolts.

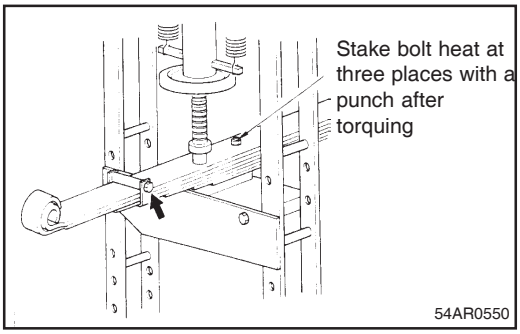

Installation

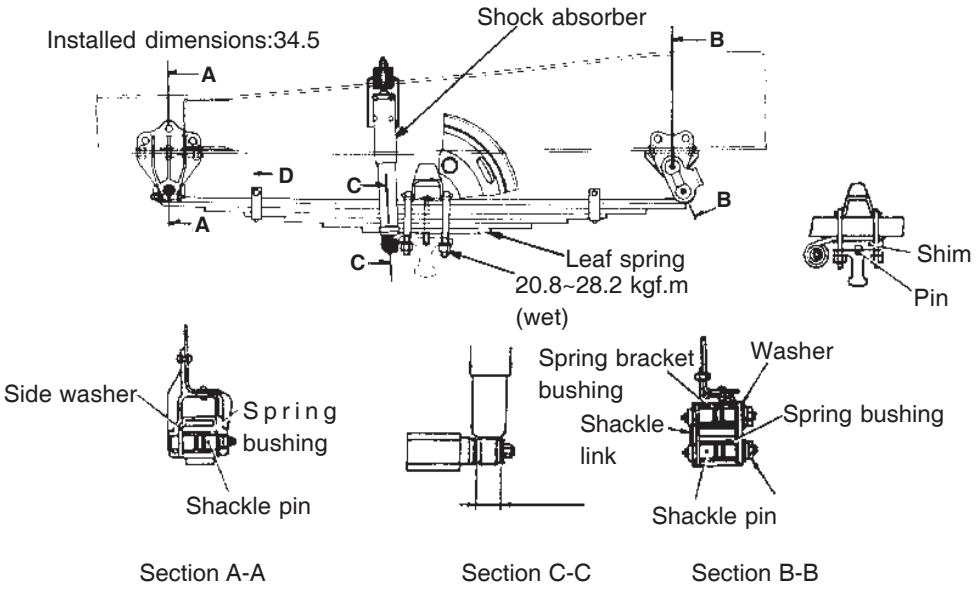

54AR0532

Installation Procedure

(1) Combination of right and left leaf springs
When the leaf spring assembly is replaced, select an assembly so that the combination of the height codes on right and left springs conforms to any one of the combinations shown below.

NOTE
Install the spring according to the classification symbols of the camber as follows.
(The camber classification symbols are marked on the upper side of the spring as +,O or -).

Item	Combination of leaves						
	1	2	3	4	5	6	7
Leaf spring assembly, LH	+	+	O	O	-	O	-
Leaf spring assembly, RH	+	O	+	O	O	-	-

(2) Locating the shackle pin
Using the Bar, align the lock bolt holes in spring bracket and shackle link with shackle pin lock bolt groove.

(3) After installation, feed chassis grease into each grease nipple.

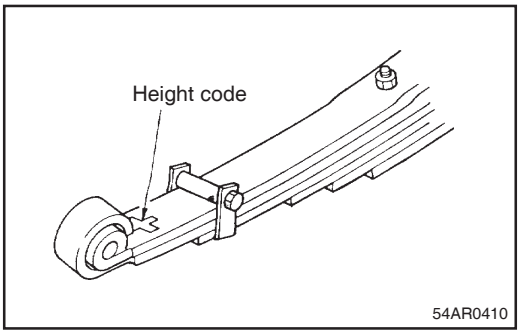

54AR0410

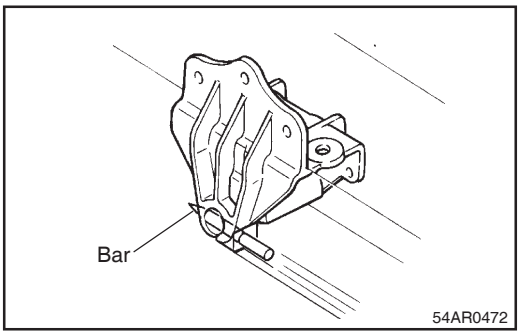

54AR0472

TROUBLESHOOTING

NOTE

Inspection the front and rear suspensions at the same time.

Symptom	Probable cause	Remedy
Spongy feel	Defective shock absorber	Replace
Cyclic bounce	Tire unevenly worn	Replace
	Wheels and tires out of balance	Correct balance
Bumps directly received	Tire inflation pressure too high	Adjust
	Cracked or broken leaf spring	Replace
Vehicle tends to develop noise when not loaded	Broken leaf spring	Replace
	Worn spring metal bushing	Replace
	Worn shock absorber rubber bushing	Replace
	Shock absorber left loose	Retighten
Vehicle tends to develop noise when loaded	Damaged spring bracket	Replace
	U-bolt left loose	Retighten

REAR SUSPENSION

GENERAL

The leaf springs mounted between the frame and rear axle, not only support the weight of vehicle body, but also absorb any vibration and shock from the road surface, thereby preventing their direct transmission to the body for effective protection of the body, passengers, and cargo. They also help suppress irregular vibrations of the wheels to ensure road stability.

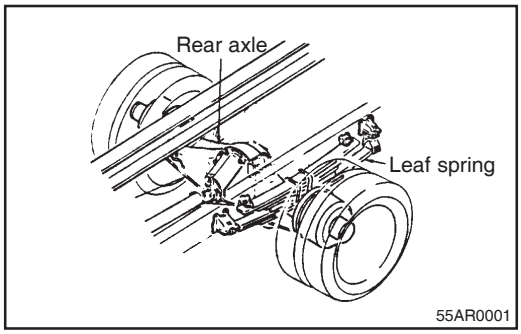

SPECIFICATIONS

Item \ Vehicle model		HD120
Leaf spring	Main	1300 x 70 x 11 - 10
L x Width x t - No. of leaves	Helper	1020 x 70 x 11 - 6

SERVICE STANDARDS

SERVICE STANDARDS TABLE

Unit:mm

Maintenance item	Nominal Value (Basic dimeter in [ ])	Limit	Remedy
Spring bracket bushing to shackle pin clearance	[32] 0 to 0.05	0.3	Replace spring bracket or shackle pin
Spring bushing to shakcle pin clearance	[32] 0.025 to 0.15	0.5	Replace bushing or shackle pin
Shackle link to shackle pin clearance	[32] 0 to 0.05	0.3	Replace shackle link or shackle pin
Shackle link bushing to shackle pin clearance	[32] 0.025 to 0.15	0.5	Replace bushing or shackle pin

TIGHTENING TORQUE TABLE

Location tightened	Screw size O.D, x pitch (mm)	Tightening torque kg·m
U-bolt	M20 x 2	45 to 47
Shock absorber i bolt tighten nut	M22 x 1.5	26 to 35
Shackle pin lock bolt	M10 x 1.25	3.5 to 5.5
Rubber bumper tighten nut	M12 x 1.25	3.4 to 5.0

SPECIAL TOOLS

Tool (Number and name)	Illustration	Use
Puller set 09431-83100	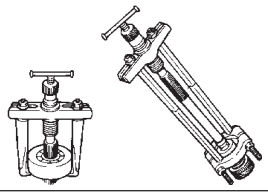 ASST0030	Removal of gear and bearing
Drift 09517-83300	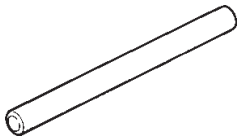 ASST0020	Removal of oil seal and bearing

SERVICE PROCEDURE

REMOVAI

Removal of front suspension

Brake hose section

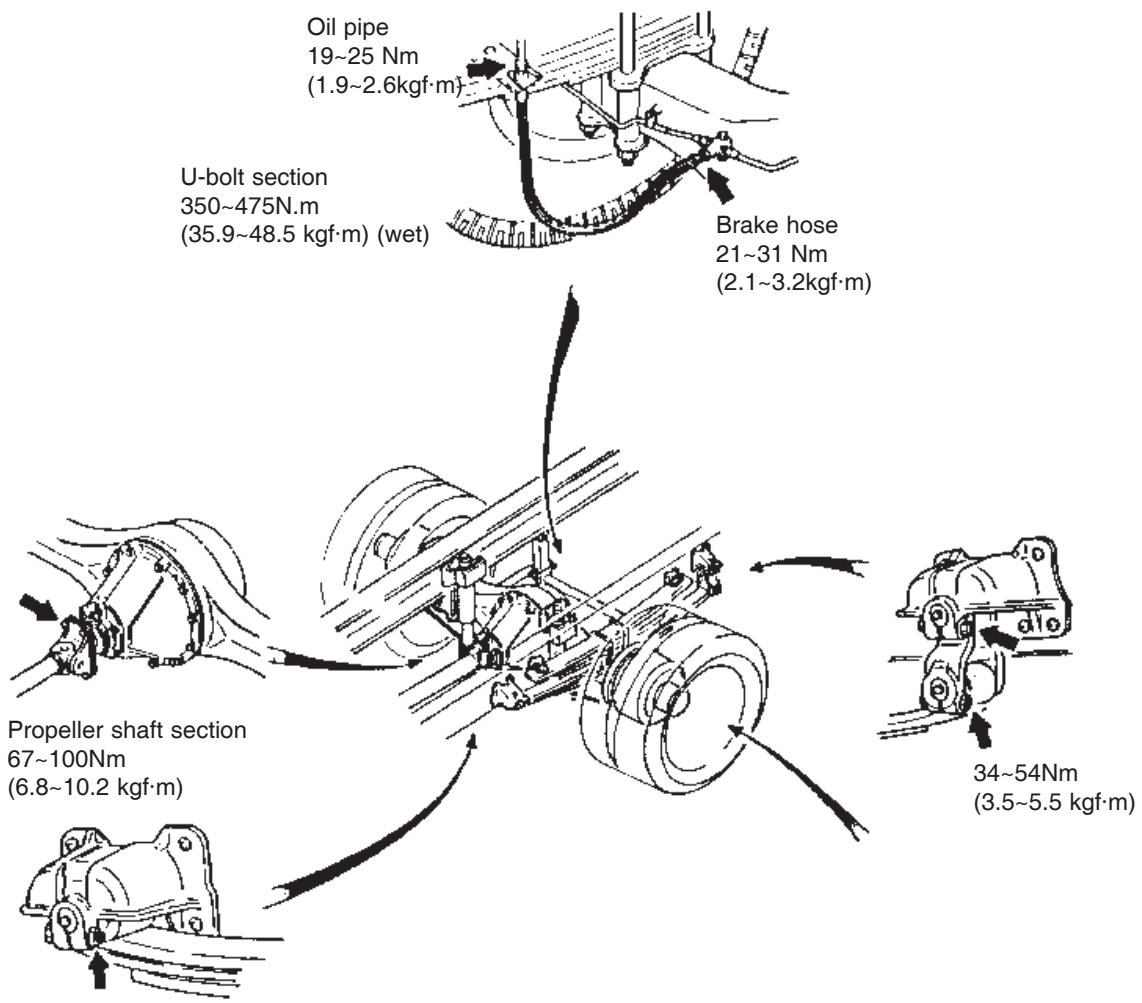

NOTE

- **Remove the brake hose from frame side first and reinstall it from the rear axle housing first, use care not to twist the brake hose.**
- **Plug removed brake hose to prevent entry of dust and dirt.**
- **After installation, bleed brake system.**

55AR0140

Removal Procedure

(1) Removal of shackle pin lock bolt
Remove the nut from the spring bracket, one at front and two in the rear, and remove the lock bolt using the Bar.

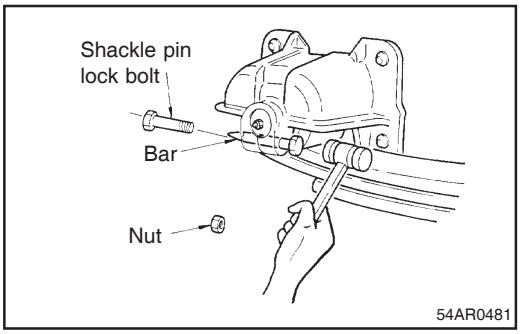

(2) Removal of shackle pin
Remove the grease nipple from the shackle pin and, using the special tool, puller set, remove the shackle pin.

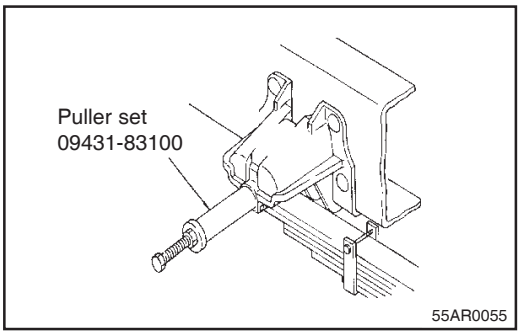

Disassembly, Inspection and Correction

BD ... Basic Diameter
NV ... Norminal Value
L ... Limit

Spring bracket to shackle pin clearance

NV BD in [ ]	L
[28]0~0.04	0.3

Shackle link bushing to shackle pin clearance

NV BD in [ ]	L
[28]0.02~0.14	0.3

Spring bracket to shackle pin clearance

NV BD in [ ]	L
[28]0~0.04	0.3

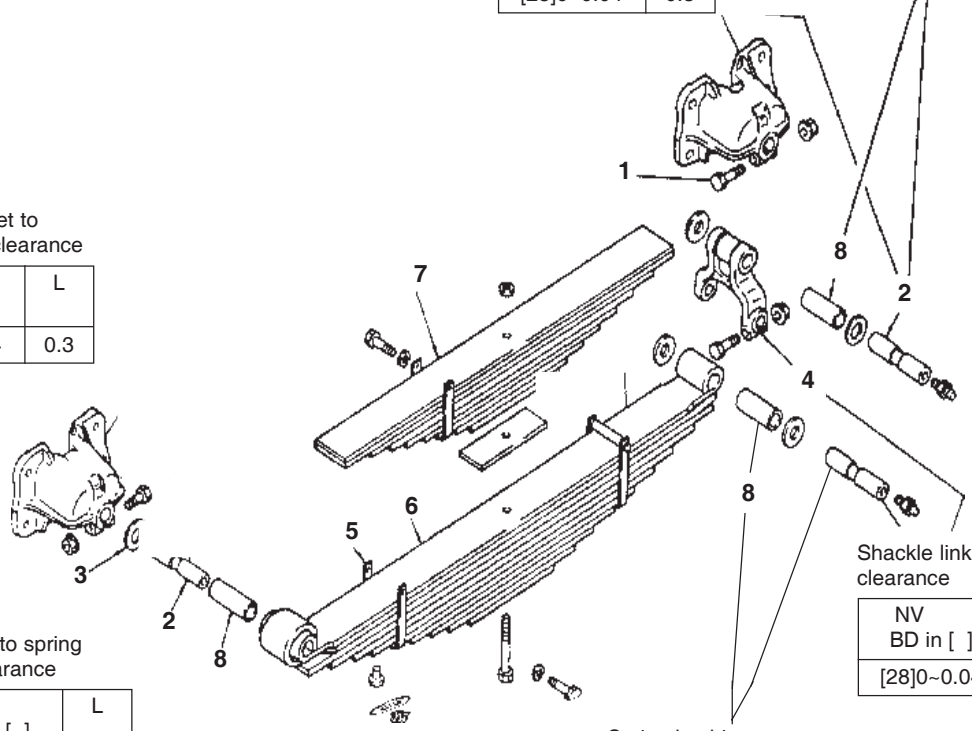

Shackle link to shackle pin clearance

NV BD in [ ]	L
[28]0~0.04	0.3

Shackle pin to spring bushing clearance

NV BD in [ ]	L
[28]0~0.12	0.3

Spring bushing to shackle pin clearance

NV BD in [ ]	L
[28]0~0.12	0.3

Disassembly sequence

1. Lock bolt
2. Shackle pin
3. Side washer
4. Shackle link
5. Clip
6. Rear main leaf spring
7. Rear helper leaf spring
8. Spring bushing

For parts with an encircled number, refer to Disassembly and Reassembly Procedure that follows.

NOTE

To reassemble, reverse the order of disassembly.

55AR0133

Disassembly Procedure

(1) Alignment marking
Make an alignment mark on the leaf spring.

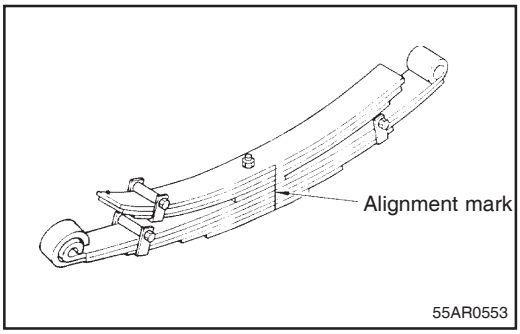

(2) Disassembly of leaf spring
Compress the leaves with a press and remove the center bolt and clip bolts.

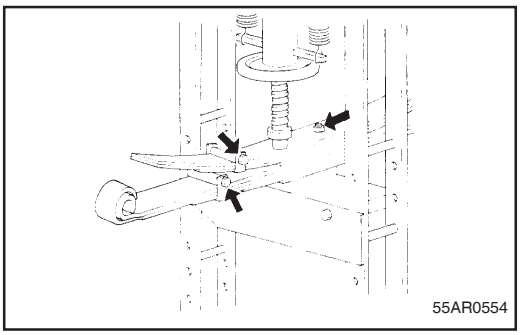

(3) Removal of clips
Using a drill press, countersink the rivet where it is staked and removed the clip.

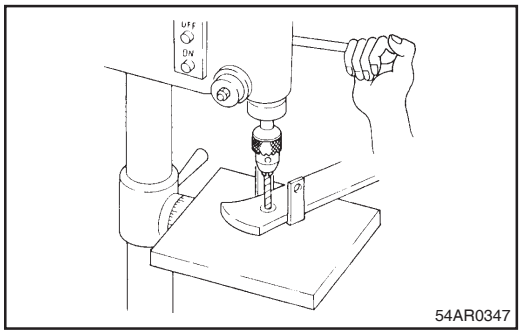

(4) Removal of bushings
Using the special tool, Drift, remove bushing from the wound-up ends of the leaf spring and shackle link.

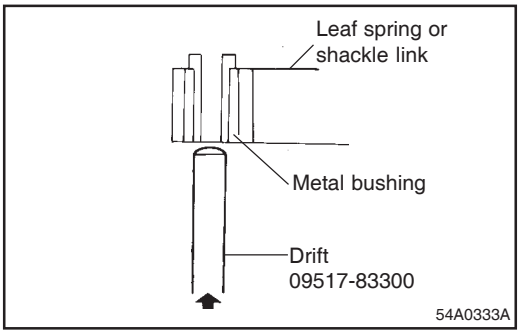

Reassembly Procedure

(1) Installation of bushings
Using the special tool, Drift press-fit the bushing into the wound-up ends of the leaf spring and into the shackle link.

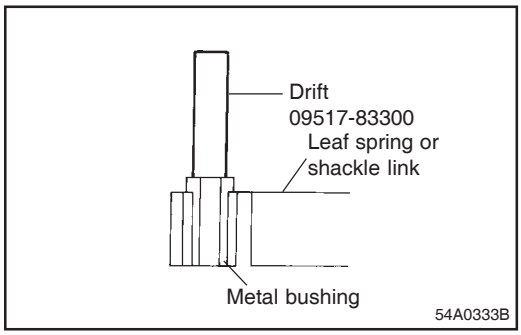

(2) Application of grease
Clean leaf surfaces and apply chassis grease between leaves.

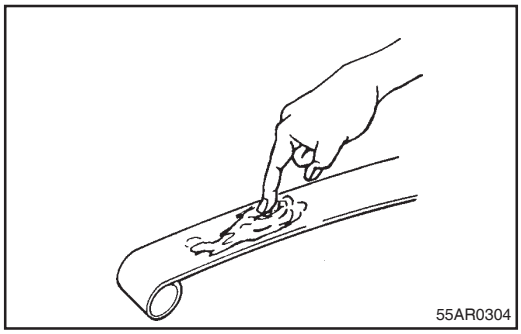

(3) Installation of clips
Using a riveting machine, fit clips into position.

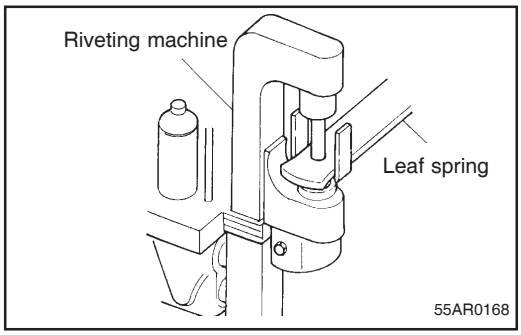

(4) Reassembly of leaf springs

(a) Line up the alignment marks on all leaves and assemble the leaves together by temporarily tightening the center bolt.

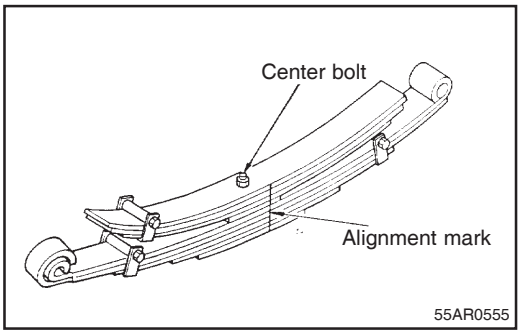

(b) With the leaves compressed with a press, tighten center bolt and clip bolts.

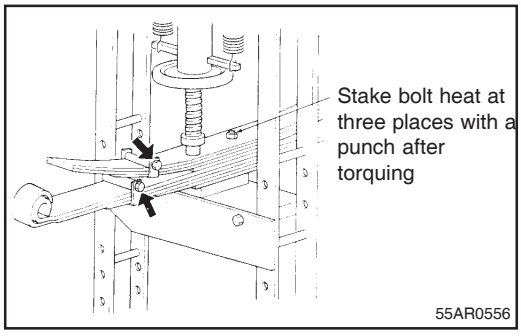

Installation

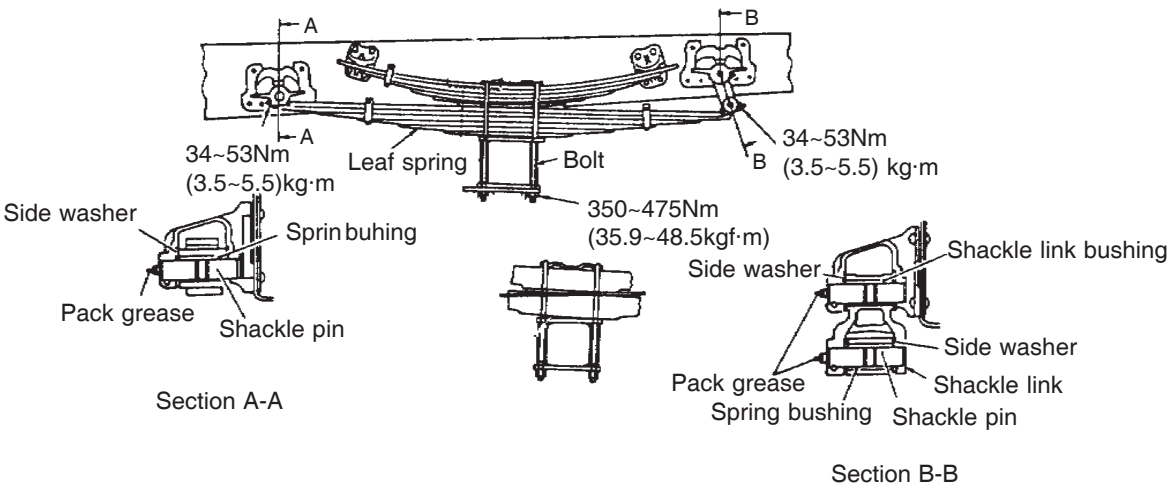

55AR0002

Installation Procedure

(1) Combination of right and left leaf springs
When the leaf spring assembly is replaced, select an assembly so that the height codes on the right leaf spring is identical to that on the left spring.

(2) Locating the shackle pin
Using the Bar, align the lock bolt hole in spring bracket and shackle link with the lock bolt groove in shackle pin.

(3) After installation, feed chassis grease into each grease nipple.

NOTE
Install the spring according to the classification symbols of the camber as follows.
(The camber classification symbols are marked on the upper side of the spring as +,O or -).

Item	Combination of leaves						
	1	2	3	4	5	6	7
Leaf spring assembly, LH	+	+	O	O	-	O	-
Leaf spring assembly, RH	+	O	+	O	O	-	-

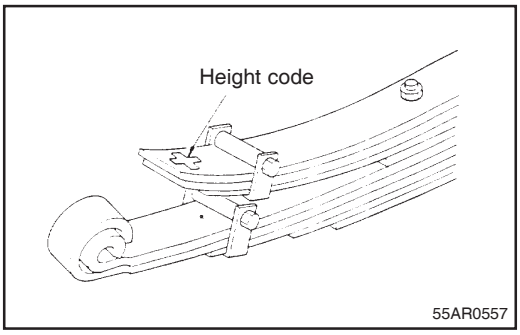

55AR0557

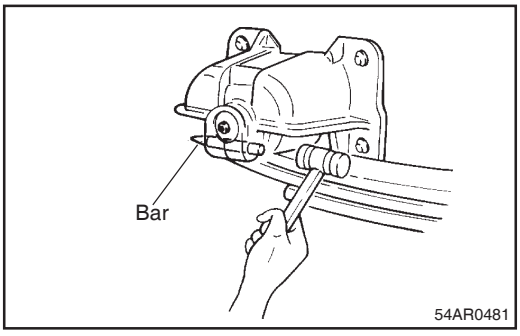

54AR0481

TROUBLESHOOTING

NOTE

Inspection the front and rear suspensions at the same time.

Symptom	Probable cause	Remedy
Cyclic bounce	Tire unevenly worn	Replace
	Wheels and tires out of balance	Correct balance
Bumps directly received	Tire inflation pressure too high	Adjust
	Cracked or broken leaf spring	Replace
Vehicle tends to develop noise when not loaded	Broken leaf spring	Replace
	Worn spring metal bushing	Replace
Vehicle tends to develop noise when loaded	Damaged spring bracket	Replace
	U-bolt left loose	Retighten